Double-Rail Type
Hoist With Motor-Driven Trolley

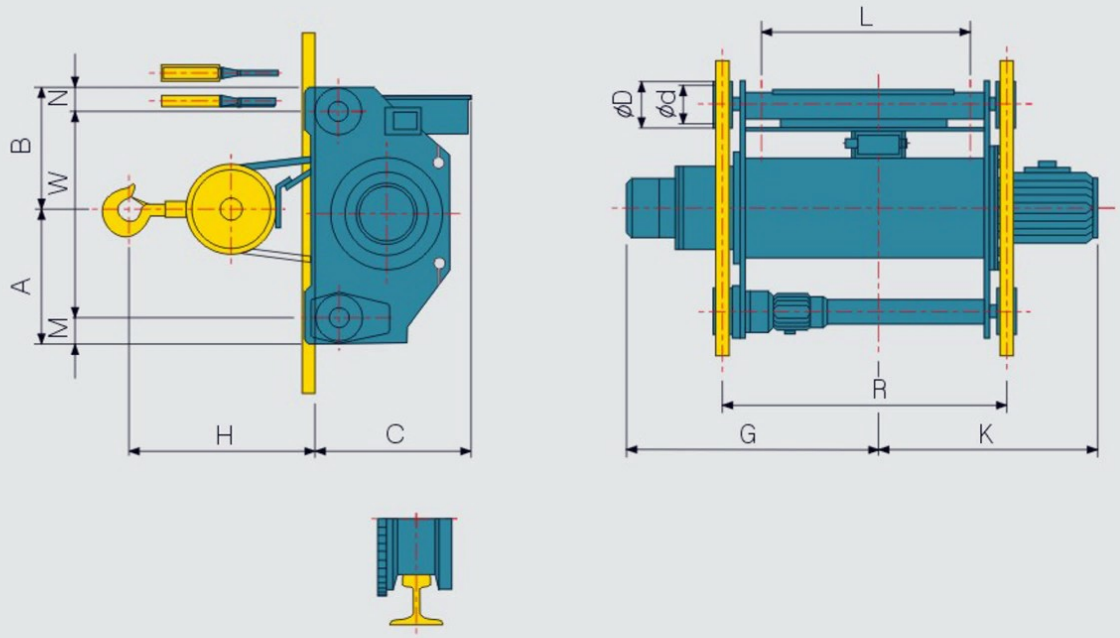

CRANE & HOIST
DAI VIET CRANE., JSC Website: cautruc.vn

Tables of Dimensions

Capacity (ton)			2	2.8	3	5
Model			KDWD 2	KDWD 2.8	KDWD 3	KDWD 5
Hoisting Lift (m)			12	12	12	12
Hositing	Speed(m/min)	High speed 50/60(Hz)	8.4/10	7.5/9	7.5/9	4.7/5.6
		Low speed 50/60(Hz)	4.2/5	3.7/4.5	3.7/4.5	3.5/4.2
	Motor(KwXP)	High speed	3.7 X 4	4.8 X 4	5.5 X 4	5.5 X 6
		Low speed	1.8 X 8	2.4 X 8	2.8 X 8	4.2 X 8
	Brake		D.C Magnetic Disc Brake			
Traversing	Traversing Speed (m/min)	High speed 50/60(Hz)	20/24	20/24	20/24	20/24
		Low speed 50/60(Hz)	13/16	13/16	13/16	13/16
	Traversing Motor (KwXP)	High speed	0.75 X 4	0.75 X 4	0.75 X 4	0.75 X 4
		Low speed	0.5 X 6	0.5 X 6	0.5 X 6	0.5 X 6
Wire rope DIA(mm) No. Of Falls			8ϕX 4	9ϕX 4	9ϕX 4	12.5ϕX 4
Approx. Dimensions(mm)		H	415	420	420	510
		R	950	950	950	1150
		A	465	465	465	510
		B	390	390	390	470
		C	530	550	550	590
		G	740	785	785	945
		K	705	705	705	845
		W	650	650	650	760
		L	680	690	690	890
		M	120	120	120	120
		N	95	95	95	105
		ϕd	140	140	140	165
		ϕD	170	170	170	195
RAIL (kg/m)			15	15	15	15
Approx.Weight(kg)			450	550	550	850

[정밀수치를 요하는 현장은 당사에 사전 확인바랍니다. If minute dimension is required on the side. It should be informed to us in advance.

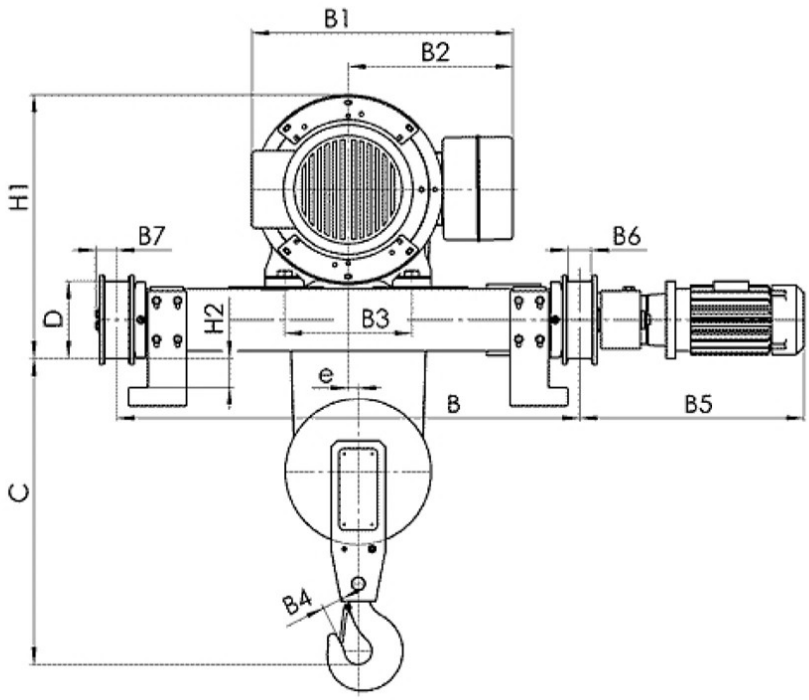

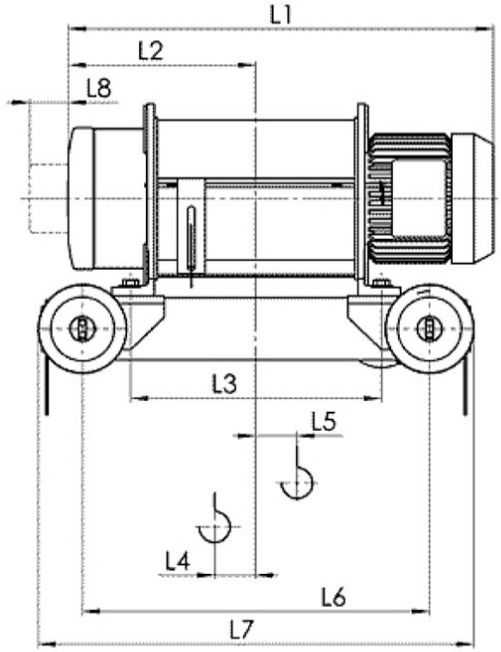

Electric wire rope hoists T81 Conveying one with a crane trolley, reeving 2/1

(1) with micro-lifting
(2) with load limitation
(3) with load limitation and with micro-lifting

Type	Reeving 2/1			Dimensions, mm																					
	Lifting height, m		Lifting capacity, kg	Lifting speed m/min		L2	L3	L4	L5	L6	L7	L8	H1	H2	B	B1	B2	B3	B4	B5	B6	B7	e	C	D
				8 12	8/2 12/2																				
				L1																					
T813...	H1	6	1000	709	749	310	365	48	55	565	750	70	470	43...58	1000	465 492(1) 557(3)	300 365(2)	200	40	455...510	50	50	18	500	160
	H2	9		814	854	362	470	75	82	670	855														
	H3	12		914	954	412	570	100	106	770	955														
	H4	18		1114	1154	512	770	75	231	970	1155														
	H5	24		1314	1354	612	970	149	332	1170	1355														
	H6	30		1426	1490	667	1004	90	312	1004	1189	80	562	43...58	1000	580 606(1) 668(3)	380 442(2)	270	45	455...510	50	50	22	500	160
	H7	36		1526	1593	712	1094	110	338	1294	1479														
T814...	H1	6	2000	816	880	362	394	45	51	594	779	80	562	43...58	1000	580 606(1) 668(3)	380 442(2)	270	45	455...510	50	50	22	550	160
	H2	9		926	990	417	504	73	79	704	889														
	H3	12		1026	1090	467	604	96	104	804	989														
	H4	18		1226	1290	567	804	90	212	1004	1189														
	H5	24		1426	1490	667	1004	90	312	1204	1389														
	H6	30		1535	1623	710	1070	88	346	1270	1455	90	657	43...58	1000	675 682(1) 760(3)	430 508(2)	330	45	455...510	50	50	26	550	160
	H7	36		1640	1728	762	1175	75	398	1375	1560														
T815...	H1	6	3200	856	923	377	424	52	59	624	809	80	562	43...58	1000	580 606(1) 668(3)	380 442(2)	270	50	455...510	50	50	22	650	160
	H2	9		976	1043	437	544	82	89	744	929														
	H3	12		1086	1153	492	654	110	116	854	1039														
	H4	18		1306	1373	602	874	110	226	1074	1259														
	H5	24		1526	1593	712	1094	110	336	1294	1479														
	H6	30		1640	1728	762	1175	75	398	1375	1560	90	657	43...58	1000	675 682(1) 760(3)	430 508(2)	330	50	455...510	50	50	26	650	160
	H7	36		1815	1903	850	1350	75	436	1550	1375														
T816...	H1	6	5000	905	993	395	440	49	66	640	825	90	657	43...58	1000	675 682(1) 760(3)	430 508(2)	330	56	455...510	50	50	26	730	160
	H2	9		1010	1098	448	545	75	82	745	930														
	H3	12		1115	1203	500	650	101	108	850	1035														
	H4	18		1325	1413	605	860	124	193	1060	1245														

CRANE&HOIST
DAI VIET CRANE., JSC
Website: cautruc.vn

	H5	24		1535	1623	710	1070	124	296	1270	1455														
	H6	30		1815	1903	850	1350	124	399	1550	1735														
	H7	36		1963	1969	905	1433	99	462	1713	1943	100	770	60... 75	1200	765 845(3)	470 550(2)	460	56	525... 573	55	60	38	730	200
T817...	H2	9	8000	1133	1168	507	638	82	77	918	1148	100	770	60... 75	1200	765 845(3)	470 550(2)	460	71	525... 573	55	60	38	820	200
	H3	12		1293	1328	587	798	123	118	1078	1308														
	H4	18		1453	1488	667	958	242	78	1238	1468														
	H5	24		1668	1703	775	1173	350	78	1453	1683														
	H6	30		1883	1918	882	1388	457	78	1668	1898														
	H7	36		2093	2128	987	1598	562	78	1878	2108														